TECHNICAL INFORMATIONS

CAM SMART WIFI

Câmera Wifi com detecção de movimento, áudio bidirecional, qualidade HD e detecção de ruído / temperatura / humidade.

Wifi Camera with motion detection, Two-way Audio, Hd Quality and Noise / tempetature / Humidity detection.

Cámara Wifi con detección de movimiento, audio bidireccional, calidad HD y detección de ruido / temperatura / humedad.

REFERENCE

Sensor Type	1/3" CMOS
Pixel	2Mega
Min illuminance	"Color 0.01Lux@F1.2 Black and White 0.001Lux@F1.2"
Lens	4.0mm F2.0
Shutter	1/25~1/100,000 per sencond
IR	High power LED with ICR
IR distance	10m
WDR	Digtal WDR
Video compression standard	H.264
Bit rate	32Kbps~2Mbps
Max picture size	1920×1080
Frame Rate	1~25 per sencond
Image setting	Support HD/SD, Support mirror,
Audio	Two-way Audio
Storage	Support SD card (Max 128G), VR, Cloud storage
Communication protocol	HTTP, DHCP, DNS, RTSP
Wifi standard	IEEE802.11b/g/n
Frequency	2.4 GHz ~ 2.4835 GHz
Channel bandwidth	Support 20/40MHz
Wifi Security	WPA-PSK/WPA2-PSK
Data Security	AES128
Music	Support
Temperature / Humidity Sensor	Support
Intelligent Sensor	Support Motion Detect / Audio Detect
Reset	Support
Working temperature	-20ºC~55ºC
Power	DC5V, 1A
Consumption	2.5W MAX
Size (mm)	53x32x280
APP	Aron Smart for Android / IOS

SIZE

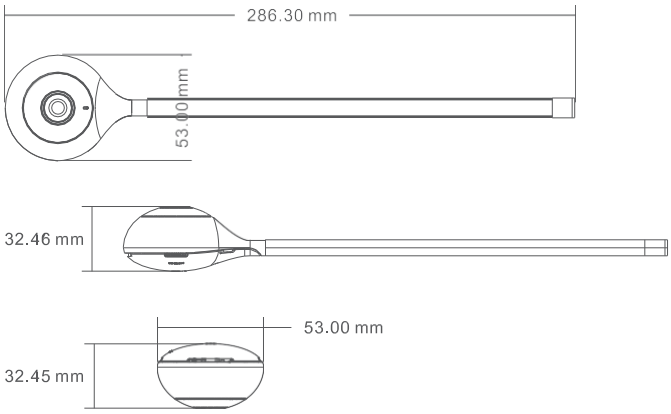
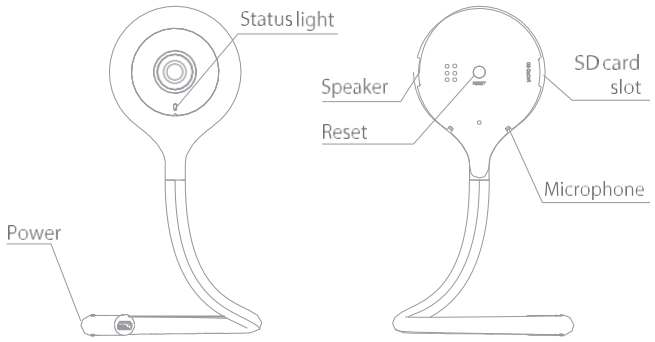
SPECIFICATION